# LAZARIAN WORLD 2PLEX

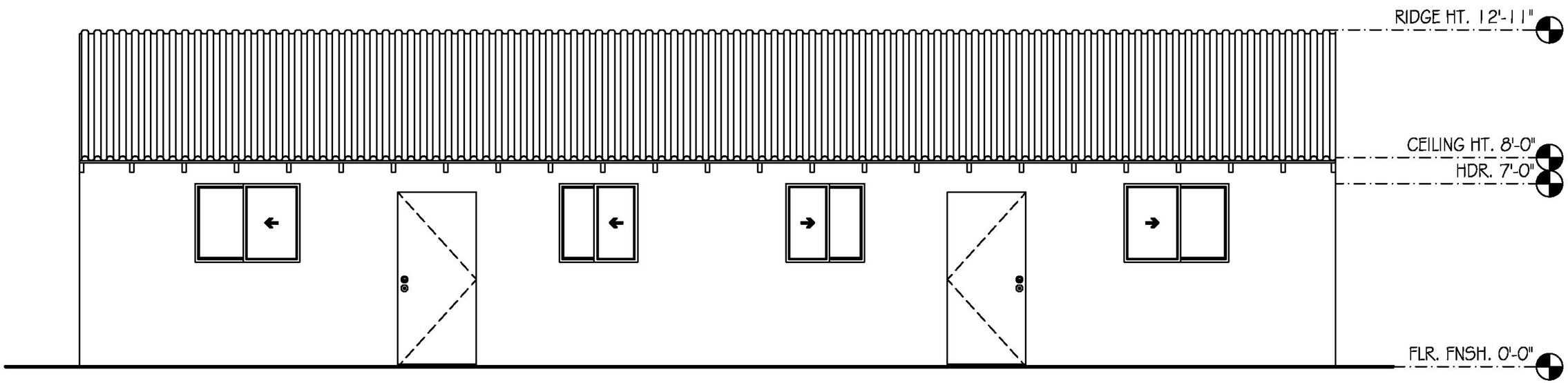


ELEV. 1 PG. 1

SCALE: 1/4" = 1'-0"

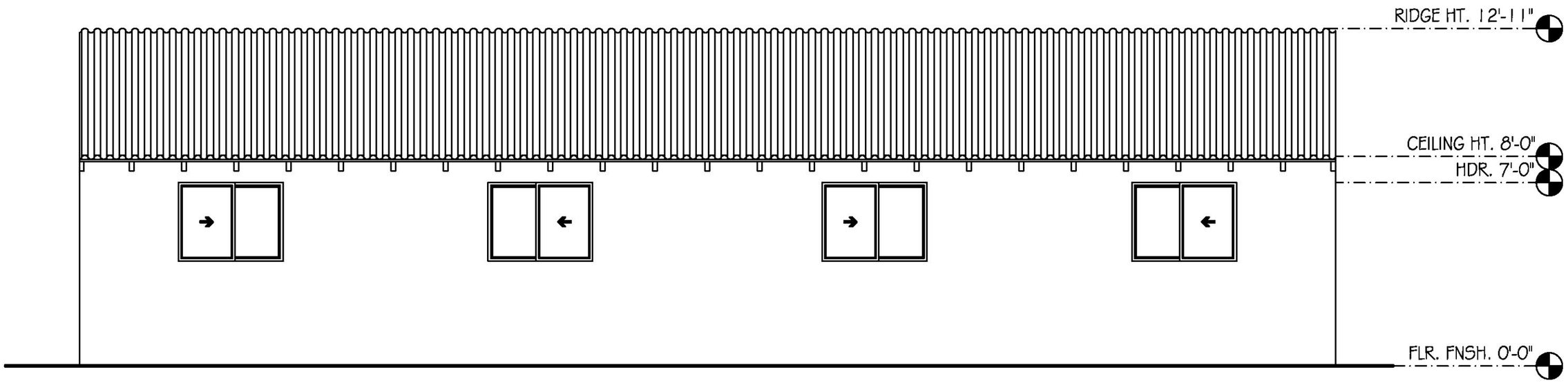


## ELEV. 2 PG. 2

SCALE: 1/4" = 1'-0"

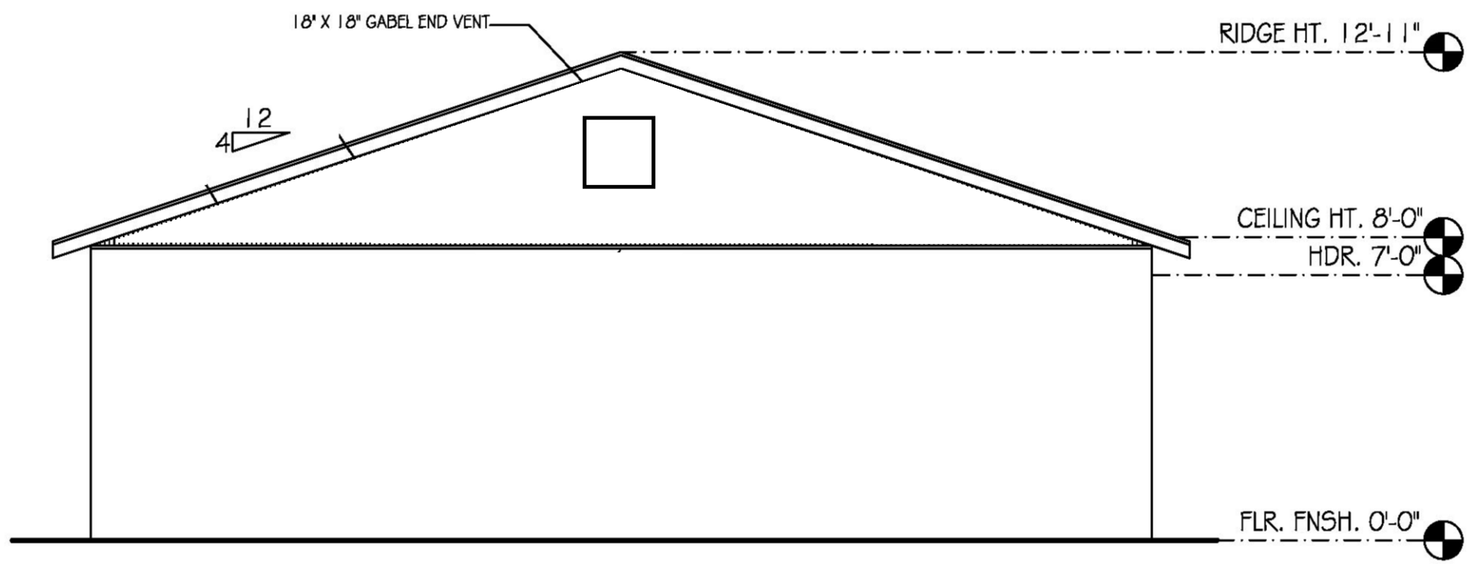
18" X 18" GABEL END VENT
RIDGE HT. 12'-11"
12
4
CEILING HT. 8'-0"
HDR. 7'-0"
FLR. FNSH. 0'-0"

ELEV. 3 PG. 3

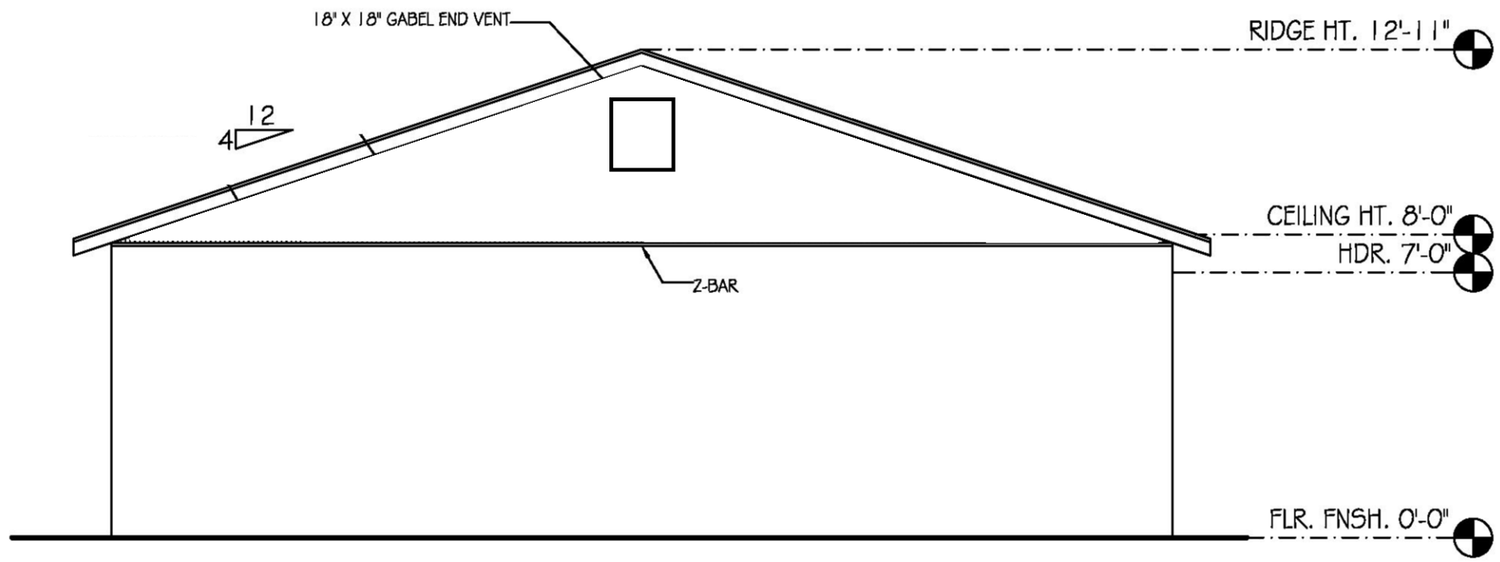


## ELEV. 4 PG. 4

SCALE: 1/4" = 1'-0"

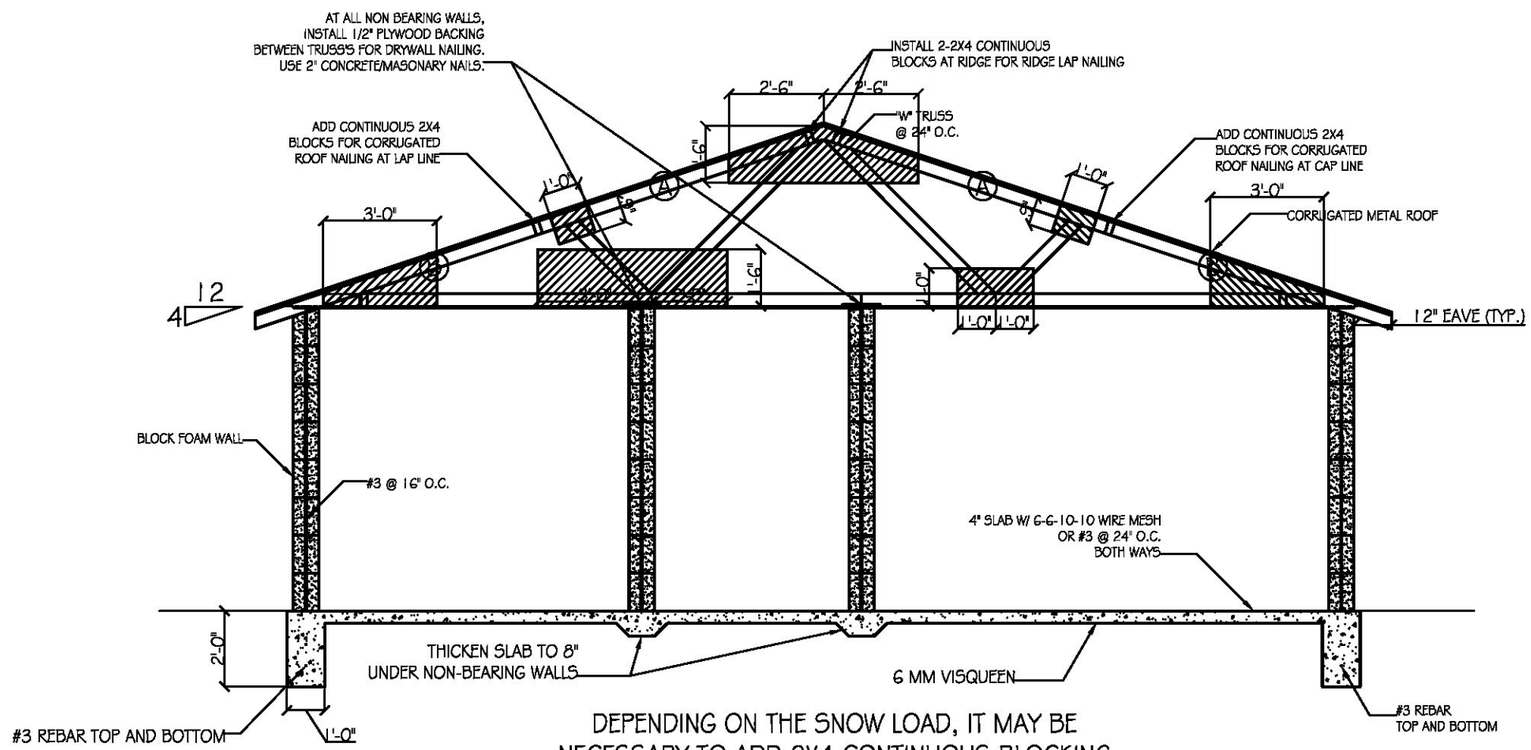


DEPENDING ON THE SNOW LOAD, IT MAY BE NECESSARY TO ADD 2X4 CONTINUOUS BLOCKING AT PONTS Ⓐ & Ⓑ TO STRNGTHEN ROOF

CROSS SECTION

# SECTION A-A PG. 5

**SCALE: 1/4" = 1'-0"**

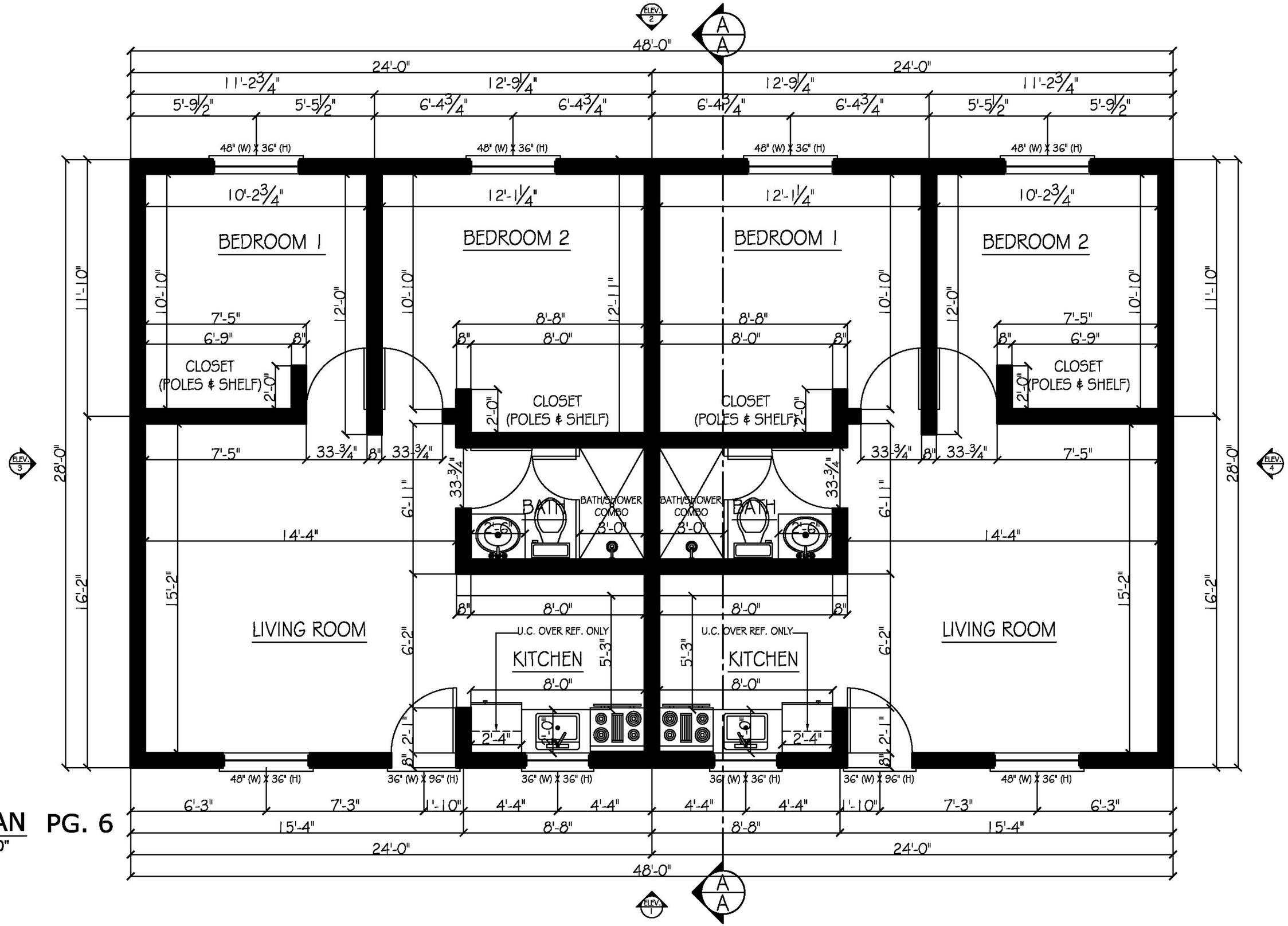


# FLOOR PLAN PG. 6

SCALE: 1/4" = 1'-0"

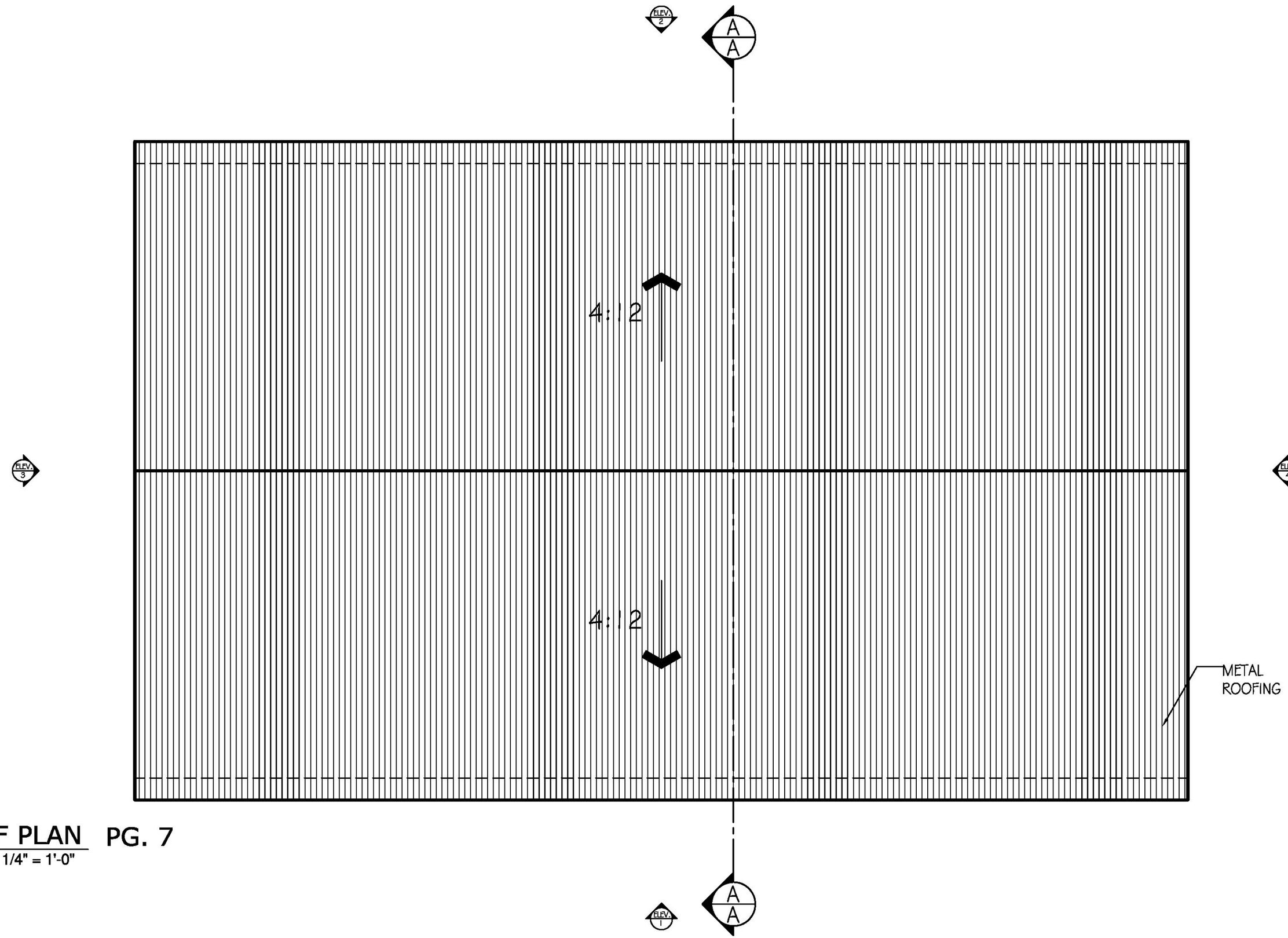


## ROOF PLAN PG. 7

SCALE: 1/4" = 1'-0"

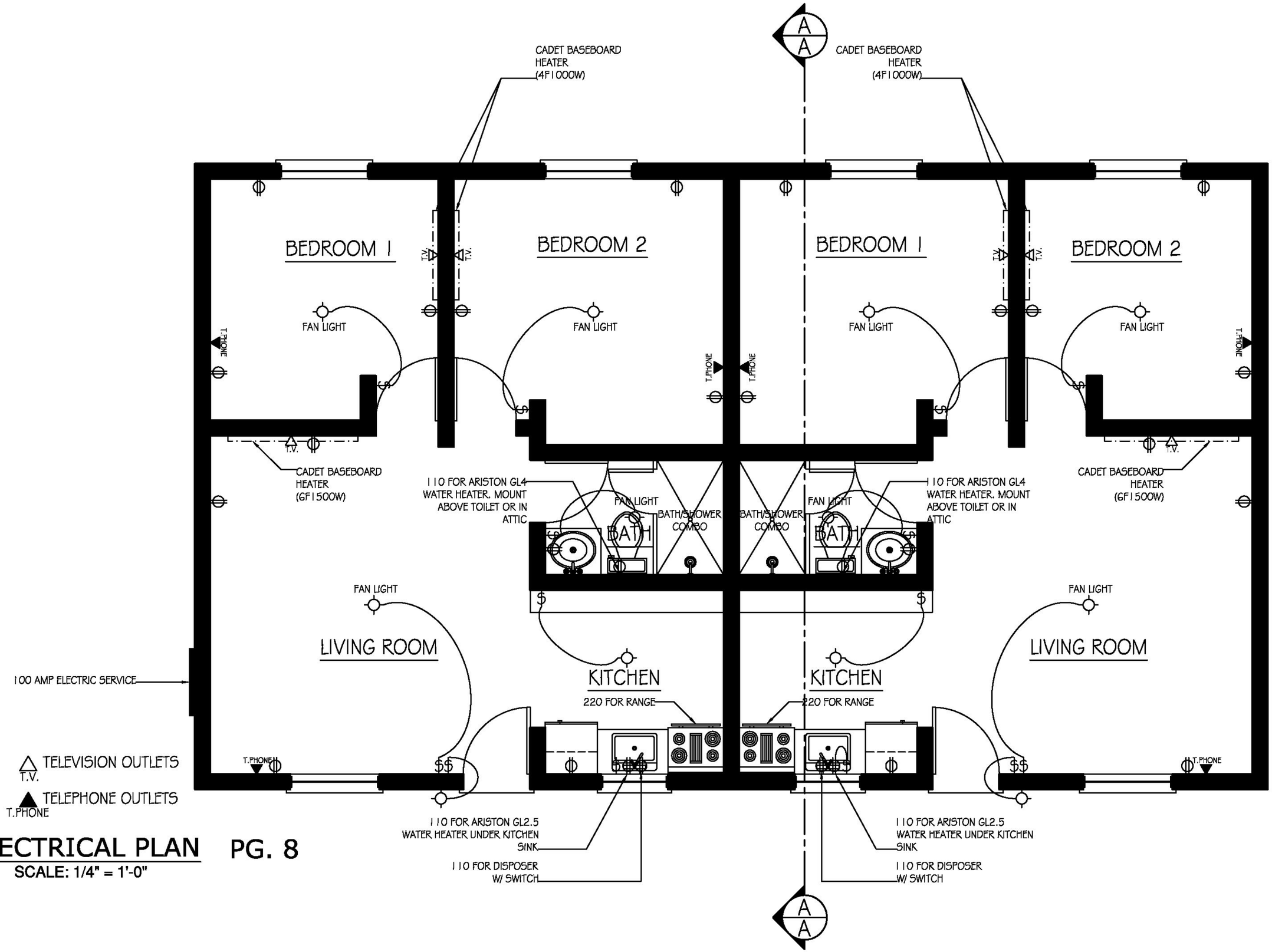


# ELECTRICAL PLAN PG. 8

**SCALE: 1/4" = 1'-0"**

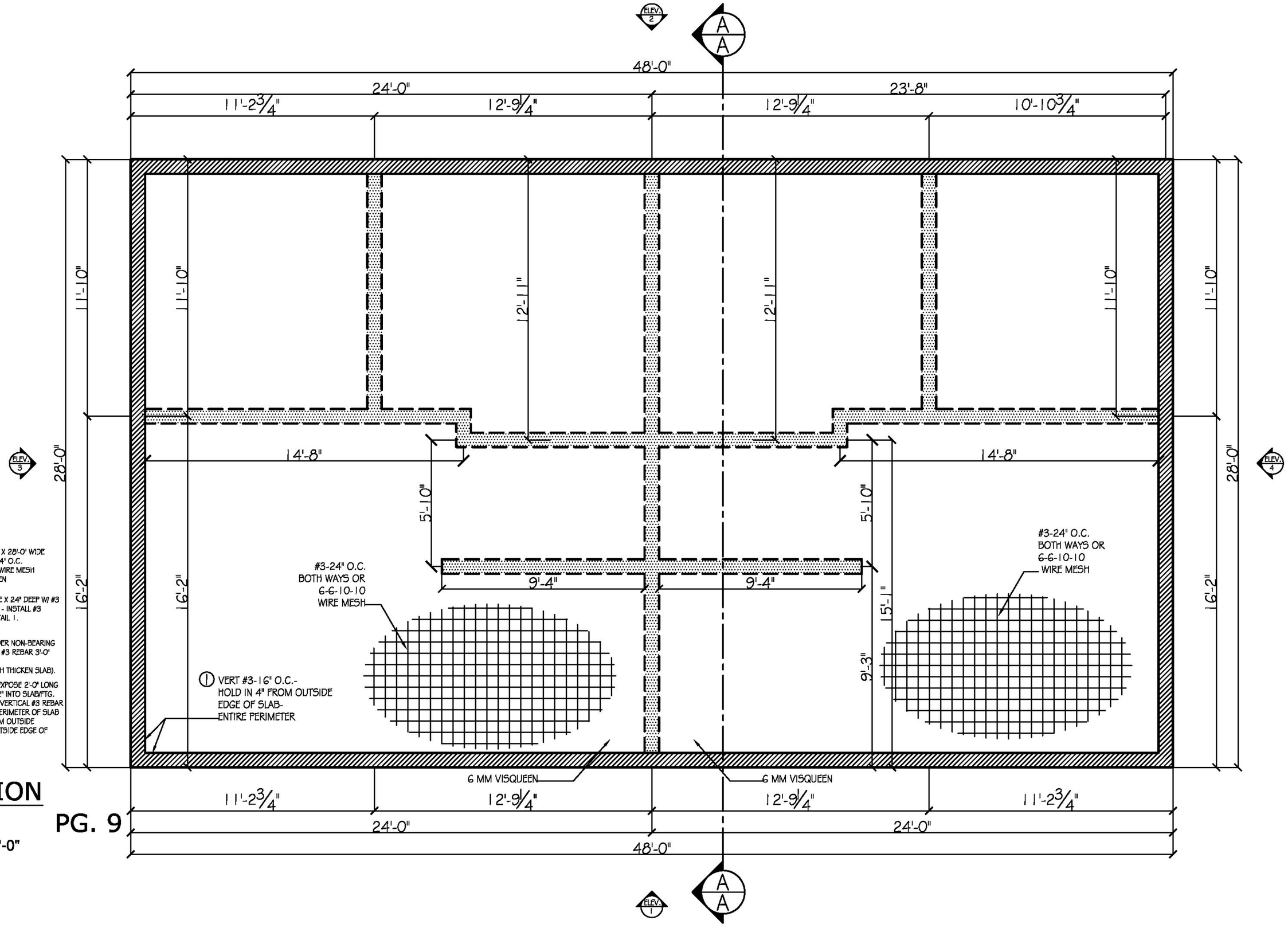


4" CONC. SLAB
SLAB DIMENSIONS 48'-0" LONG X 28'-0" WIDE
4" THICK SLAB W/ #3 - 24" O.C.
BOTH WAYS OR 6-6-10-10 WIRE MESH
AND 6 MM VISQUEEN

WALLS W/ FTGS. 12" WIDE X 24" DEEP W/ #3 REBAR T&B CONTINUOUS - INSTALL #3 VERTICAL REBAR PER DETAIL 1.

THICKEN SLAB TO 8" UNDER NON-BEARING WALLS (DRILL AND EPOXY #3 REBAR 3'-0" LONG 16" O.C. INTO ALL NON-BEARING WALLS WITH THICKEN SLAB).

1 USE 3'-0" LONG #3 AND EXPOSE 2'-0" LONG VERTICAL (THEREFORE 12" INTO SLAB/FTG. AND TIE TO TOP REBAR). VERTICAL #3 REBAR TO BE 16" O.C. ENTIRE PERIMETER OF SLAB (LAYOUT-HOLD IN 4" FROM OUTSIDE CORNERS AND FROM OUTSIDE EDGE OF SLAB).

# FOUNDATION PLAN

SCALE: 1/4" = 1'-0"

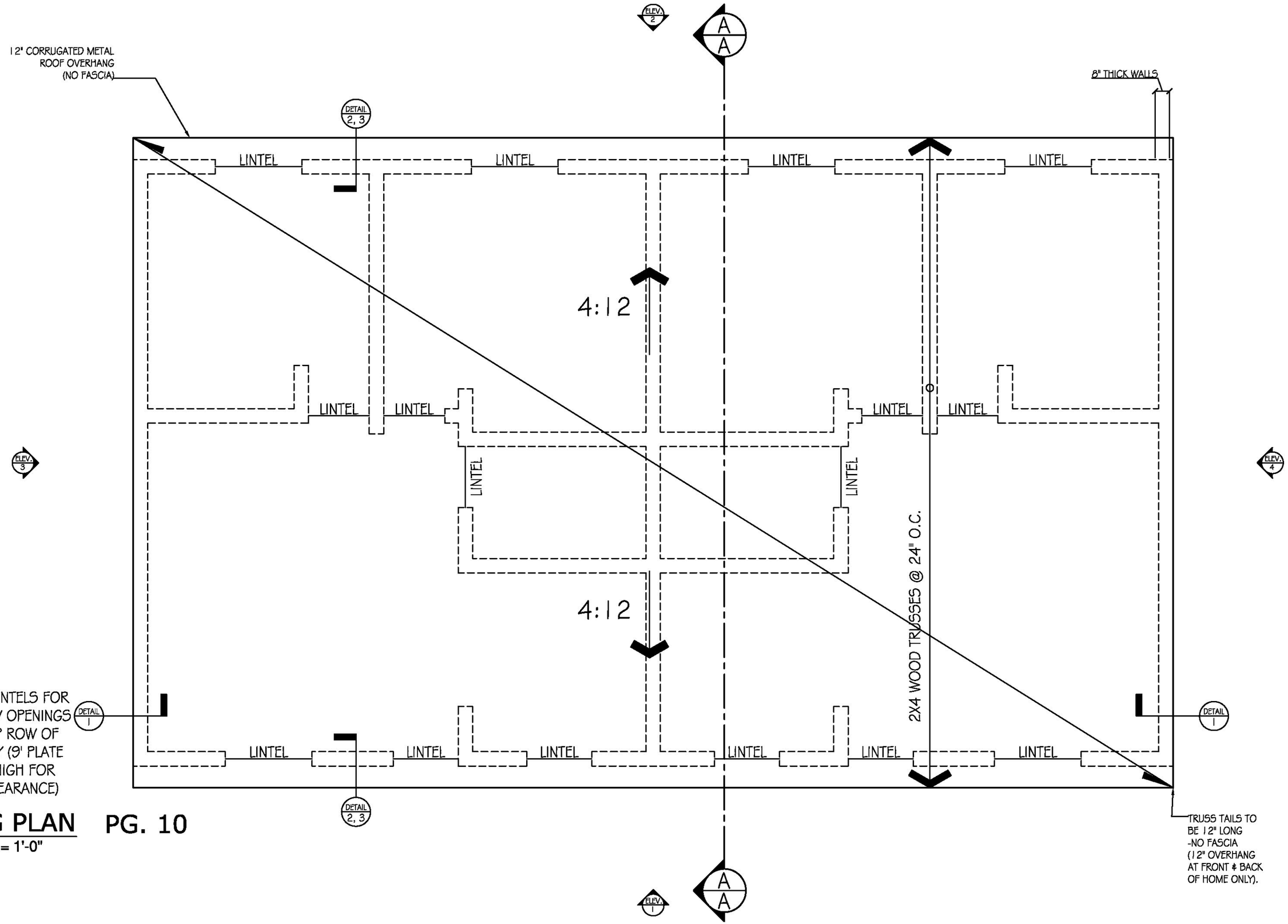


NOTE: ALL BEAMS/LINTELS FOR DOOR AND WINDOW OPENINGS TO BE SET AT TOP ROW OF FOAM BLOCK ONLY (9' PLATE LINE AND NET 8' HIGH FOR HEADER/LINTEL CLEARANCE)

## FRAMING PLAN

**SCALE: 1/4" = 1'-0"**

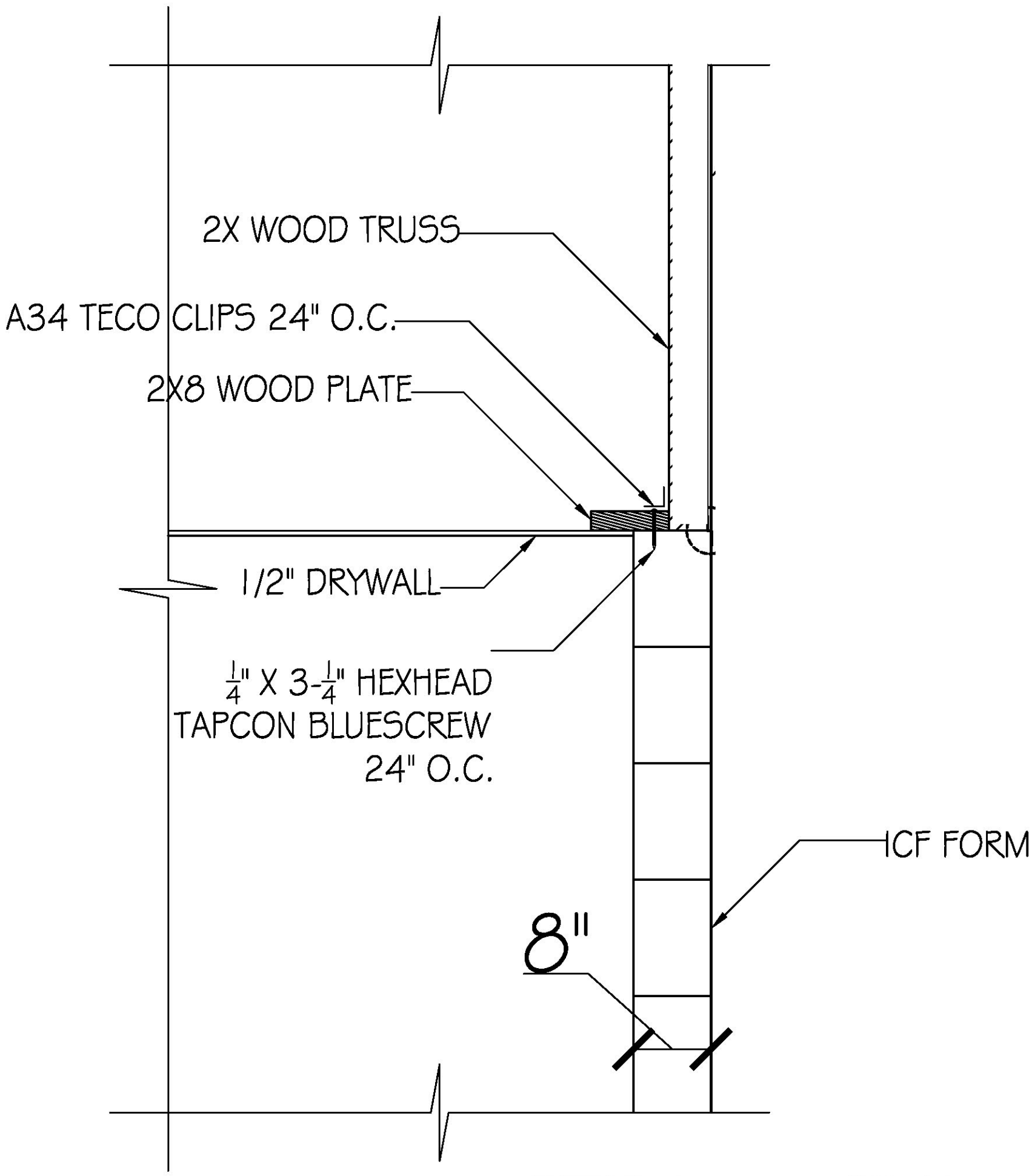


DETAIL 1

SCALE: 1/2" = 1'-0"

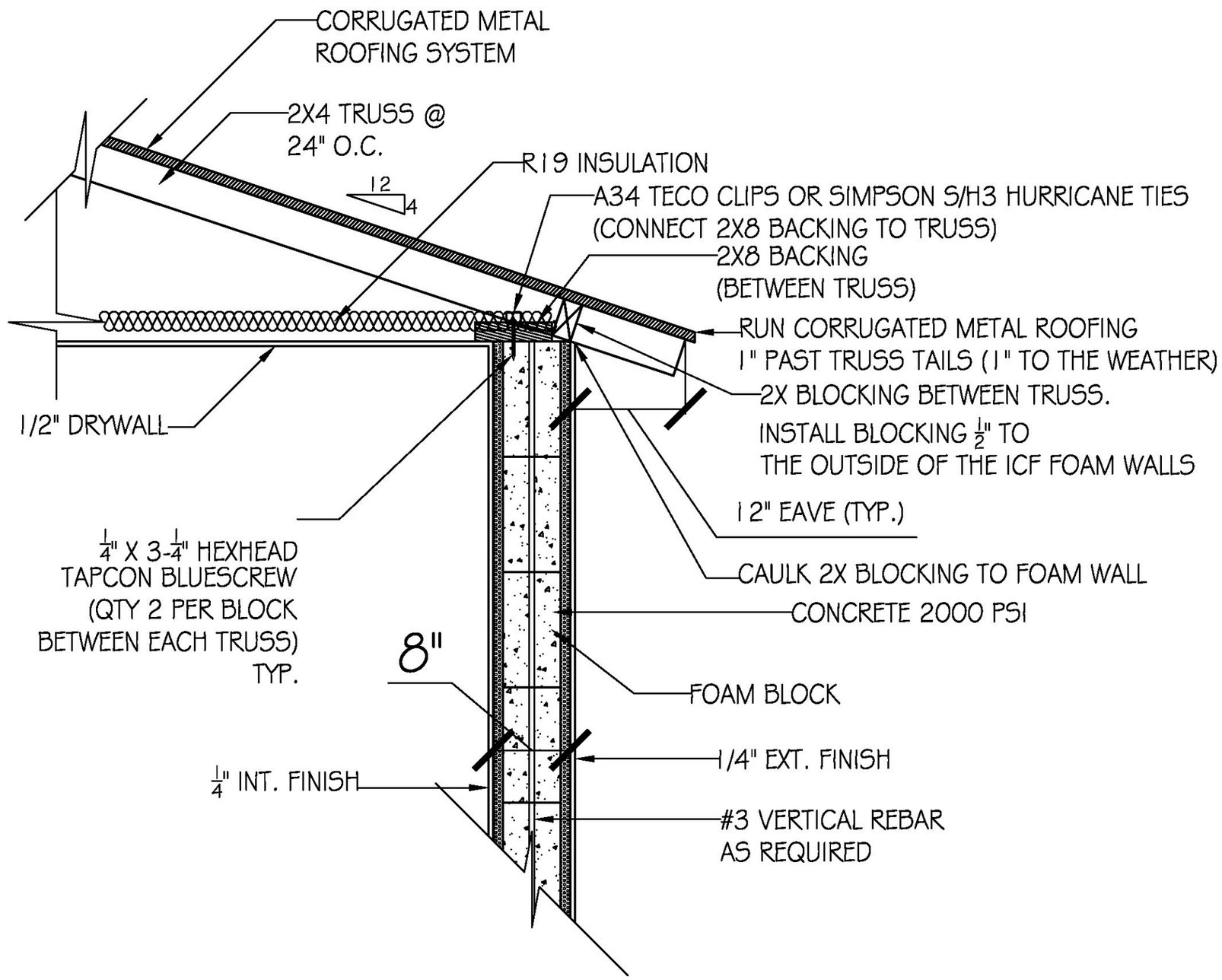


## DETAIL 2

SCALE: 1/2" = 1'-0"

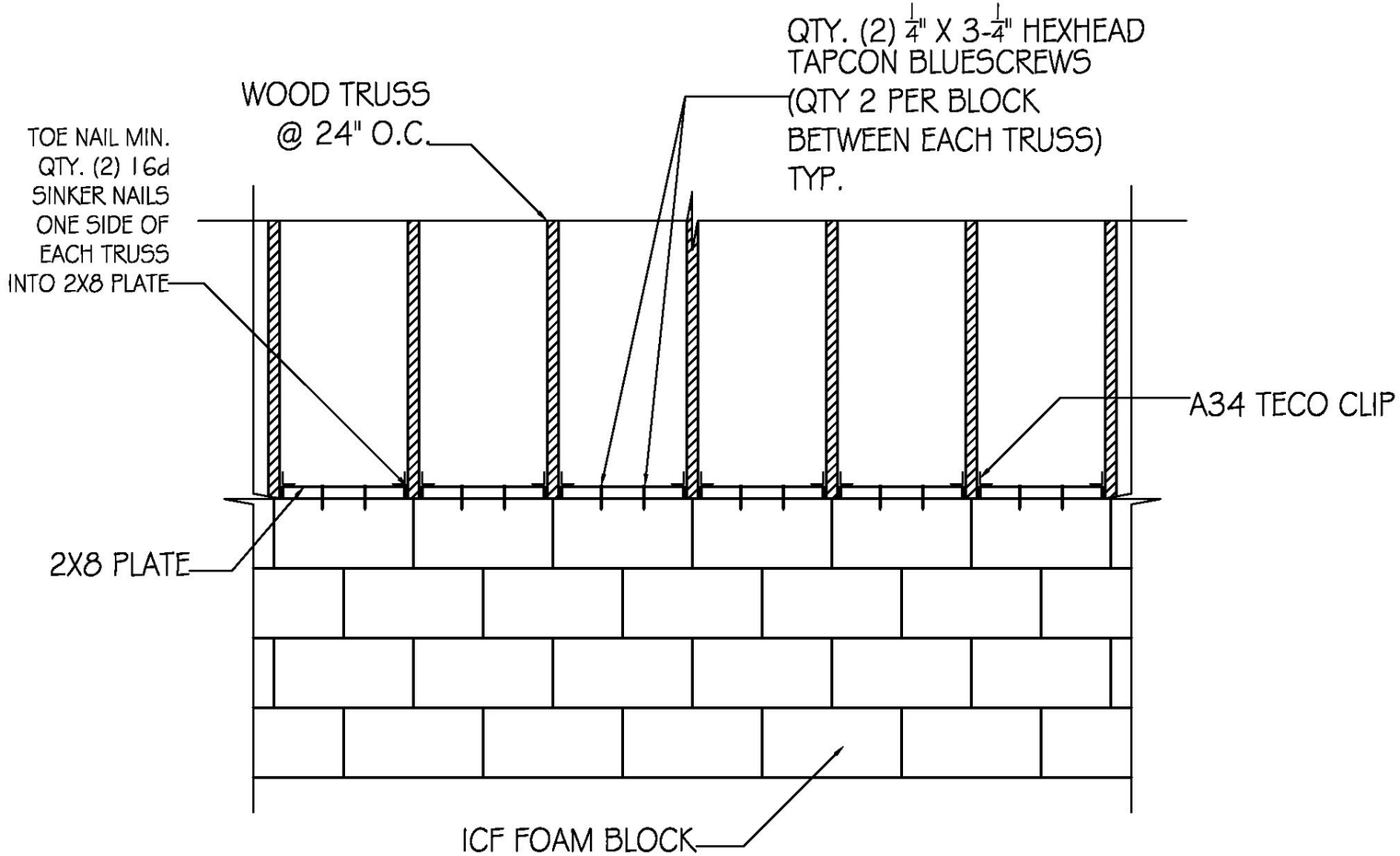


## DETAIL 3

SCALE: 1/4" = 1'-0"

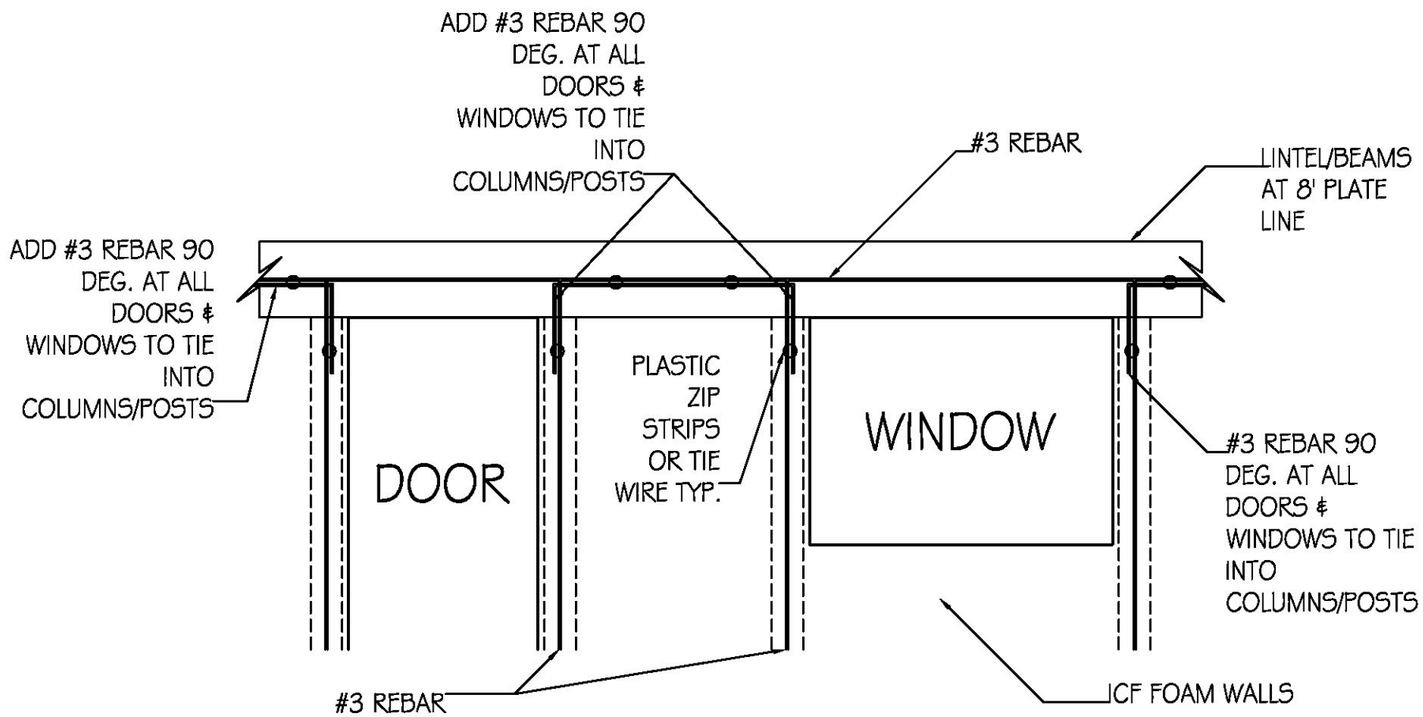


90 DEG. #3 REBAR TO TIE IN WALL COLUMNS TO LINTELS/BEAMS

NOTE: DASHED LINES ¦ ¦ DESIGNATE CONCRETE COLUMN/KING STUD AT ALL DOORS AND WINDOWS

NOTE: ALL 90 DEG. #3 REBAR PER DETAILS #4, 5 AND 6 TO BE 18" EACH SIDE/LEG.

## DETAIL 4

**SCALE: 1/4" = 1'-0"**

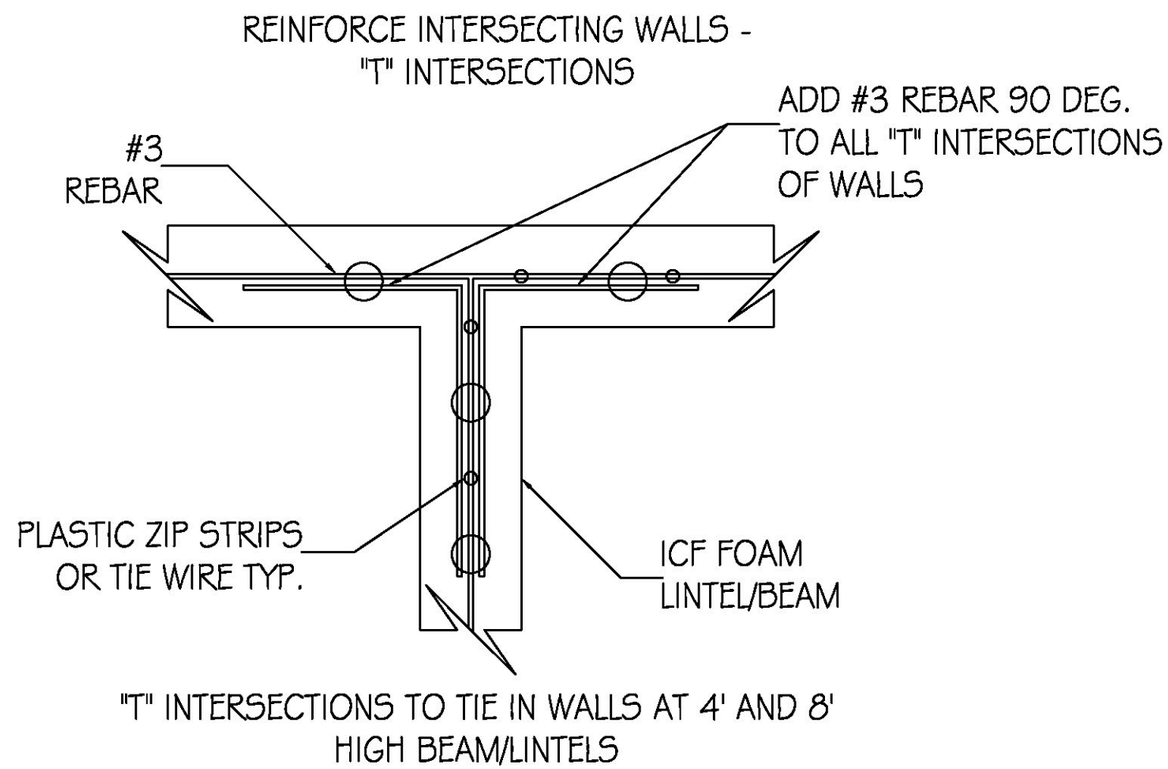


## DETAIL 5
## (PLAN VIEW)

SCALE: 1/4" = 1'-0"

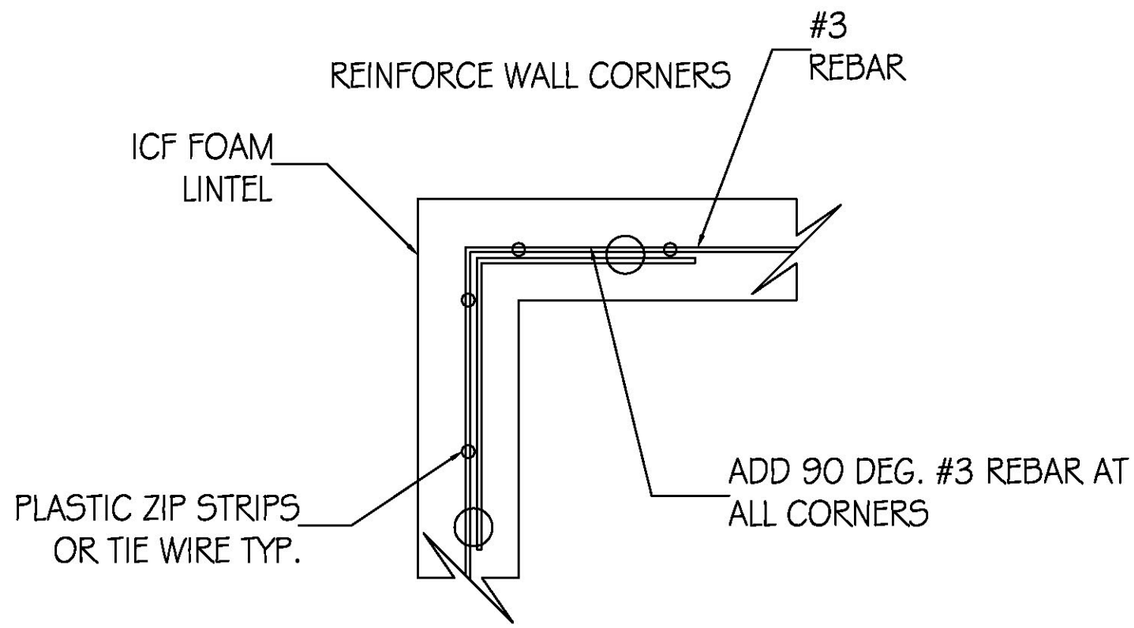


INSIDE/OUTSIDE CORNERS 90 DEG. #3 REBAR TO
TIE IN WALLS AT 4' AND 8' HIGH BEAM/LINTELS

## DETAIL 6
## (PLAN VIEW)

SCALE: 1/4" = 1'-0"